Conduction

Occurs in solids via molecular vibration.

$q = \lambda * (\Delta T / d)$

Where:

- λ = thermal conductivity [W/(m·K)]
- d = material thickness [m]
- ΔT = temperature difference [K]

	Heat conduction coefficient
Material	λ [W/(m·K)]
Concrete	2.0
Chipboard	0.2
Insulation material	0.04

$$R_m = \frac{1}{\lambda} \cdot d = \frac{d}{\lambda} \, [m^2 \cdot K/W]$$

$$q_g = \frac{1}{R_m} \cdot (T_1 \cdot T_2) \, [W/m^2]$$

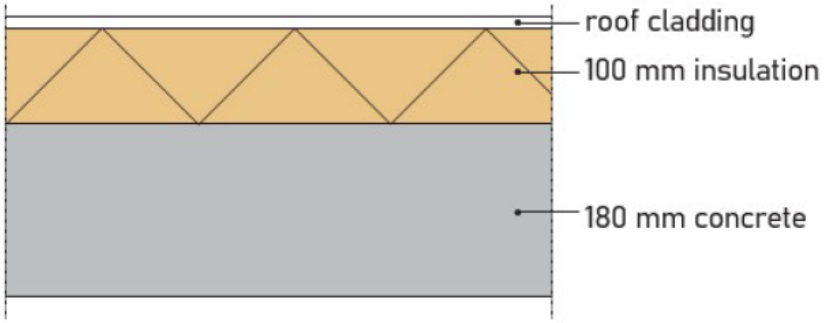

Figure 1.10 Multi-layered construction

$$R_c = R_{m1} + R_{m2} + R_{m3} + \ldots$$

Thermal Resistance (R)

$R = d / \lambda$

Total resistance $R_T = R_{si} + R_c + R_{se}$

$$U = 1/T_T$$

U-value

$U_T = 1 / R_T$

- Shows how much heat passes per m^2 per K
- Used for energy performance calculations

$$\Delta T_{m;i} = \frac{R_{m;i}}{R_T} \cdot \Delta T \ [°C]$$

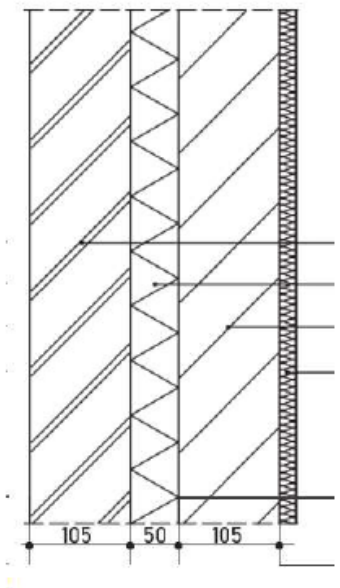

Construction layer	d [m]	λ [W/(m·K)]	$R_{m;i}$ [m²·K/W]	$\Delta T_{m;i}$	T [°C]
Ouside air					-10
R_{se}			0.04	0.73	-9.3
Brickwork	0.105	1.2	0.09	1.6	-7.7
Insulation material	0.05	0.04	1.25	22.89	15.2
Sand-lime brick	0.105	0.95	0.11	2.02	17.2
Plaster layer	0.01	0.50	0.02	0.37	17.6
R_{si}			0.13	2.38	
Inside air					20
Total			1.64		30

Figure 1.19 Calculation of progression of the temperature in a completely insulated cavity wall

Heat Balance
Energy Calculation for Buildings

Heat loss:
transmission, Φ_{tr}
ventilation, Φ_{v}
unintentional ventilation (leakage) Φ_{l}

Heat supply:
Solar radiation, Φ_{sol}
Internal heat gain, Φ_{i}
Heating system, Φ_{h}

$$\Phi_{tr} + \Phi_{v} + \Phi_{l} = \Phi_{h} + \Phi_{sol} + \Phi_{i}$$

Heat loss due to transmissions, Φ_{tr}

$$\Phi_{tr} = H_{tr} \cdot (\theta_i - \theta_e)$$

$$H_{tr} = \sum U_i \cdot A_i + \sum_{k=1}^{m} \psi_k l_k + \sum_{j=1}^{p} X_j$$

Heating of supply air to θ_i

$$H_v = \rho \cdot c_p \cdot q_v$$

$$\Phi_{v,room} = \rho \cdot c_p \cdot q_v \cdot (\theta_i - \theta_{sup})$$

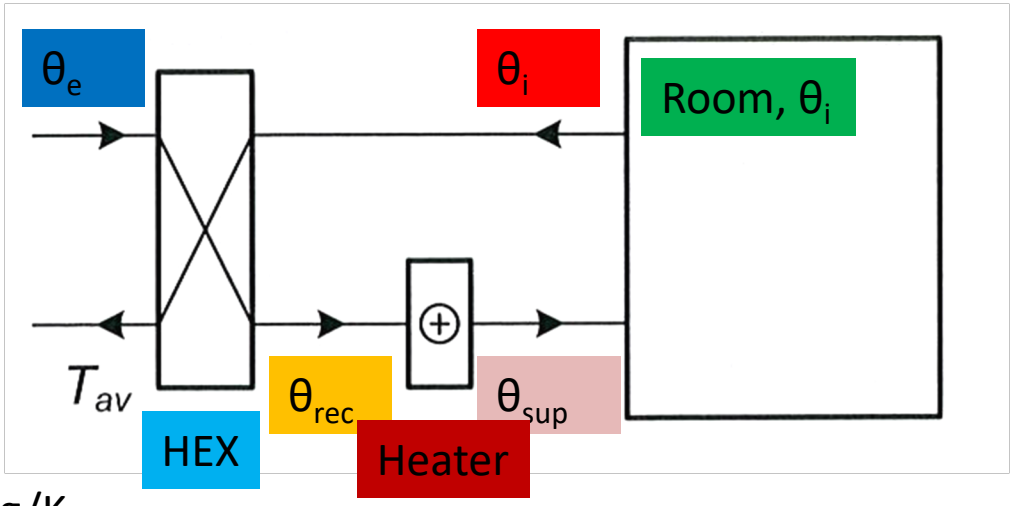

Where:

ρ = air density, 1.2 kg/m^3

c_p = specifik heat capacity of air, 1000 J/kg/K

q_v = ventilation air flow rate (m^3/s)

Heating of supply air after heat recovery from θ_{rec} to θ_{supply}

$$\Phi_{heater} = \rho \cdot c_p \cdot q_v \cdot (\theta_{sup} - \theta_{rec})$$

Heat recovery with a heat excahnger with efficieny , η

$$\eta = \frac{(\theta_{rec} - \theta_e)}{(\theta_i - \theta_e)}$$

Leakage (infiltration/unintentional ventilation)

$H_l = \rho \cdot c_p \cdot q_l$; q_l is leakage air flow rate m^3/s

$$\Phi_l = H_l \cdot (\theta_i - \theta_e)$$

$$\Phi_{tr} + \Phi_v + \Phi_l = \Phi_h + \underbrace{\Phi_{sol} + \Phi_i}_{\Phi_{free\ heating}}$$

Total heat loss:

$$\underbrace{(H_{tr} + H_v \cdot (1 - \eta) + H_l)}_{H_{tot} = H_{tr} + H_v \cdot (1 - \eta) + H_l} \cdot (\theta_i - \theta_e)$$

Heating power needed (heat loss minus free heat gain) - must be provided

$$\Phi_h = H_{tot} \cdot (\theta_i - \theta_e) - \Phi_{free\ heating}$$

Desigh heating power:

$$\Phi_{design} = H_{tot} \cdot (\theta_i - DWOT)$$

$$\Phi_h = H_{tot} \cdot (\theta_i - \theta_e) - \Phi_{free\ heating}$$

$$\Phi_{free\ heating} = H_{tot} \cdot (\theta_i - \theta_b) \Rightarrow \theta_b = \theta_i - \frac{\Phi_{free\ heating}}{H_{tot}}$$; balance temperature

$$E = \sum_{i=1}^{8760} \Phi_i \cdot \Delta t = \sum_{i=1}^{8760} H_{tot} \cdot (\theta_b - \theta_e) \cdot \Delta t \Rightarrow H_{tot} \cdot \sum_{i=1}^{8760} (\theta_b - \theta_e) \cdot \Delta t$$

$$DH = \sum_{i=1}^{8760} (\theta_b - \theta_e) \cdot \Delta t$$

Annual Energy use:

$$E = H_{tot} \cdot DH$$

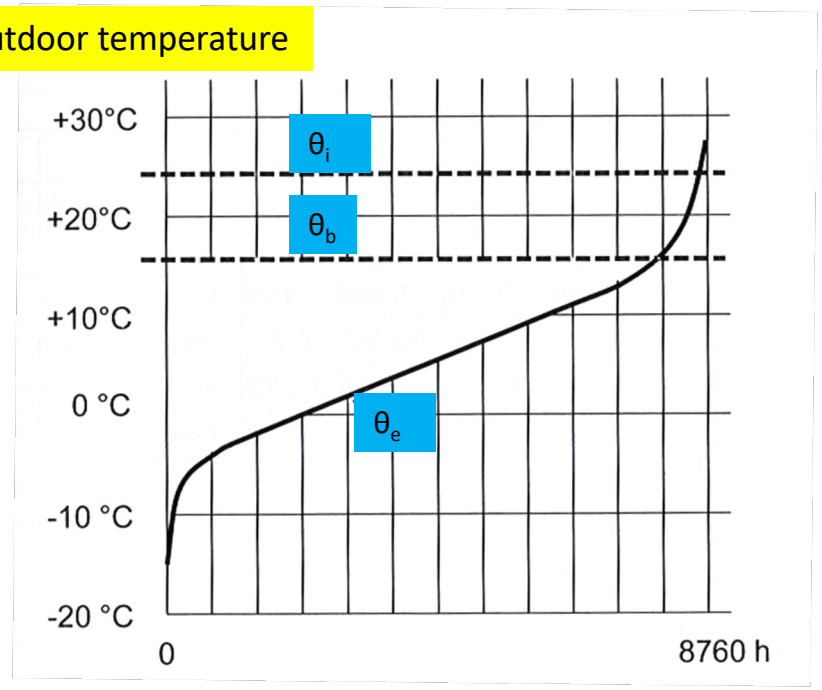

Time Constant

$$\tau_b = \frac{\Sigma m_j c_j}{H_{tot}} \cdot \frac{1}{3600}$$

$$\Delta\theta_i = \Delta\theta_e \cdot (1 - e^{\frac{-t}{\tau_b}})$$